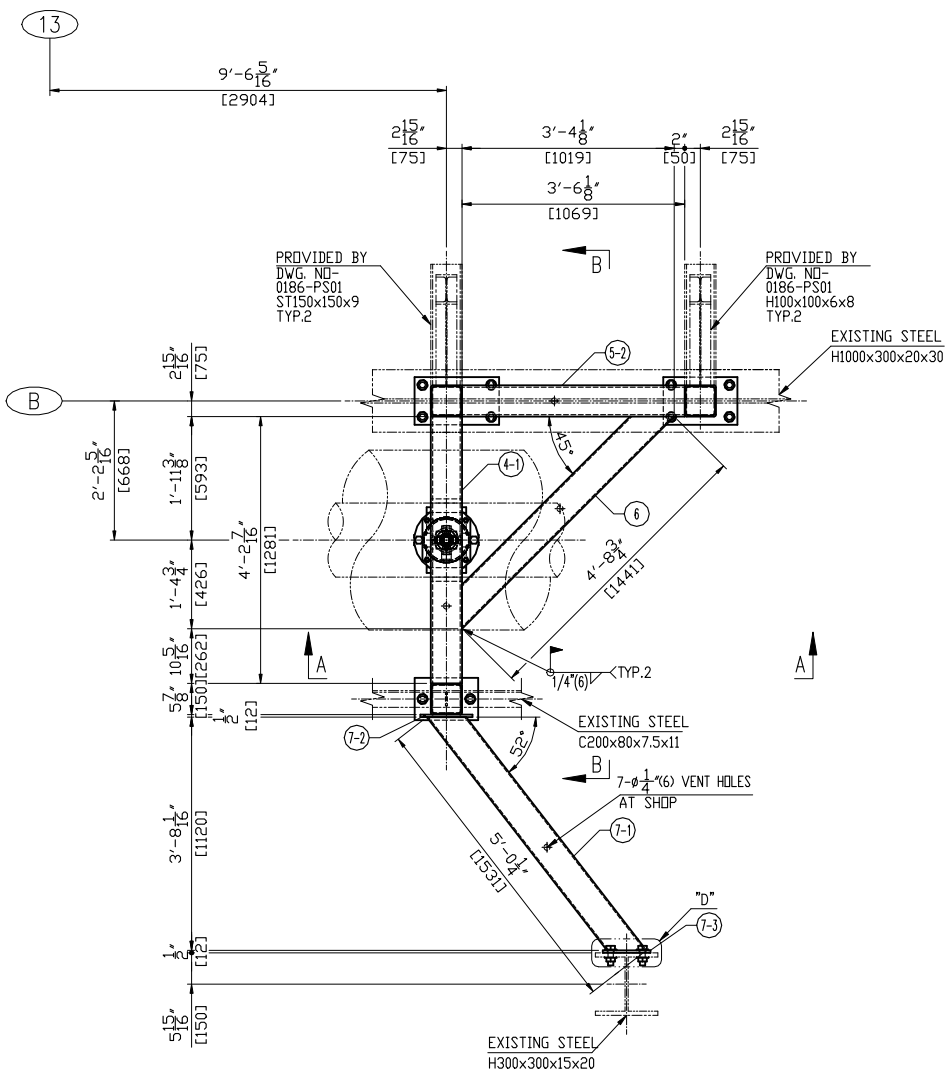

PLAN VIEW

Revision History

Rev	Description	Date	Drawn / Checked By Approved By
–	INITIAL ISSUE	2026-01-21	Drawn J.B.HONG Checked By T.H.KIM Approved By B.L.CHOI

BILL OF MATERIAL — TOTAL WEIGHT : 1202.9 LB — SELECTION NO. 1501 — AREA LEFT

ITEM	DESCRIPTION	TYPE OR SIZE	LENGTH(mm)	LENGTH(IN)	QTY.	MATERIAL	WEIGHT(LB)/UNIT	WEIGHT(LB)/TOTAL	REMARK
1-1	PIPE CLAMP	PCHDA-350-R			1	A387-22		117.95	NOTE #2
1-2	EYE NUT	EN-M30			1	A668-C		7.28	NOTE #2
1-3	HEX. NUT	HN-M30			2	A563-A	0.44	0.88	NOTE #2
1-4	THREADED ROD	THR-M30	930	36.61	1	A36		9.64	NOTE #2
1-5	THREADED STUD	THS-M30	100	3.94	1	A36		1.10	NOTE #2
1-6	CLEVIS WITH PIN	CP-M30			1	A668-C		7.50	NOTE #2
1-7	WELD ON EYE PLATE	WP-M30			1	A36		2.20	NOTE #2
1-8	VAR. SPRING HANGER	VH1A-6-M30			1	-		85.98	NOTE #2
2	H.S.B/N/2PW	1"-8 UNC-3 1/2"			8	A325	1.70	13.60	NOTE #3
3	H.S.B/N/2PW	1"-8 UNC-3"			4	A325	1.63	6.52	NOTE #3
4-1	SQUARE TUBE(1-16)	ST150x150x9	1281	50.43	1	A500 Gr.B		107.88	NOTE #3
4-2	SQUARE TUBE(1-16)	ST150x150x9	2857	112.48	1	A500 Gr.B		240.61	NOTE #3
4-3	PLATE(2-127-SLOT33)	PL12x203x305			1	A36		12.86	NOTE #3
4-4	COVER PLATE(4-R14)	PL6x141x141			1	A36		2.06	NOTE #3

PIPING INFORMATION — PIPE SIZE (IN): 14 — PIPE MATERIAL: A335-P92

SUPPORT NUMBER	ISO NO.: 1501			OPER. TEMP (F): 1089			INSULATION (IN): 10		
	SUPPORT COORDINATES			DESIGN LOADS (KIPS)			DESIGN MOVEMENTS (IN)		
	X	Y	Z	X	Y	Z	X	Y	Z
1501-PS03	32'-9 11/16'	9'-5 3/16'	98'-1'	0	0	-7.73	-0.45	0.82	0.36
	10000	2875	29896						

"Z" UP, "Y" NORTH, "X" GAS FLOW EAST

HANGER SETTING DATA(EACH)		TOTAL TRAVEL	1.97 IN
SPRING LOAD	7.00 KIPS	THERMAL MOVEMENT	0.36 IN
HOT LOAD	6.14 KIPS	SPRING RATE	3045.2 LB/IN
COLD LOAD	7.23 KIPS	VARIABILITY	18 %

UNIT NO.: 11

NOTES:

1. PIPE SUPPORT SHOP ATTACHMENTS, GENERAL NOTES, WELD & PLATE DETAILS 1635572-D1S0-3800
2. THIS ITEM WILL BE SUPPLIED BY ENGINEERED PIPE SUPPORT SUPPLIER.
3. THIS ITEM WILL BE SUPPLIED BY STEEL SUPPORT FABRICATOR.
4. PIPE ATTACHMENTS THAT ARE SHOP WELDED ONTO THE PIPE ARE SUPPLIED BY THE PIPE FABRICATOR.
5. BILL OF MATERIAL SHOWN ARE FOR ONE (1) SUPPORT, THERE IS ONE (1) SUPPORT PER UNIT
6. REFER TO DRAWING 1635572-D2S0-3801~3804 FOR TYPICAL SHOP WELDED CONNECTION DETAILS NOT SPECIFIED ON THIS DRAWING.
7. FF* : 1 15/16(50)mm FIELD ADJUST
8. THIS ITEM WILL BE SUPPLIED BY CUSTOMER.

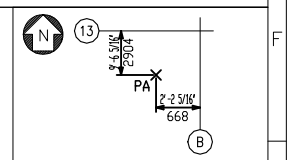

KEY PLAN

ISOMETRIC VIEW

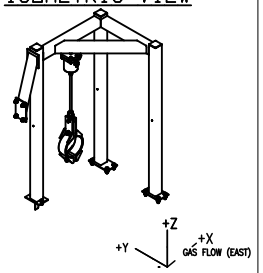

NLR
Copyright© GE Vernova and/or its affiliates 2026
All rights reserved. The information herein is proprietary information of GE Vernova and/or its affiliates. Thus, it is being provided with the explicit expectation of restricted use. All persons or legal entities receiving this information shall be deemed by the act of its receipt to have contractually agreed to make no duplications, reproductions of any nature by any means, modifications, disclosures, or use use any portion of this material; except as is expressly authorized in writing by GE Vernova and/or its affiliates.

THIRD ANGLE PROJECTION

Similar To: NONE	Created By: SEONGHWA		MLI No. NONE
First Made For: 1635572	Checked By: VIMAL.V	Approved By: Kim, Chunrae	IEC61355 No. MTC
GE VERNOVA	Document Type: DETAIL DRAWING		Sheet Size A2
	Document Title: PIPE SUPPORT FOR HP STEAM		
Creation Date 2026-01-21	Drawing No. 1635572-1501-PS03	Revision –	Sheet 1 OF 3

ITEM	DESCRIPTION	TYPE OR SIZE	LENGTH(mm)	LENGTH(IN)	QTY.	MATERIAL	WEIGHT(LB)/UNIT	WEIGHT(LB)/TOTAL	REMARK
4-5	PLATE	PL16x200x230			1	A36		12.74	NOTE #3
5-1	SQUARE TUBE	ST150x150x9	2857	112.48	2	A500 Gr.B	240.61	481.22	NOTE #3
5-2	SQUARE TUBE(1-I6)	ST150x150x9	1069	42.09	1	A500 Gr.B		90.03	NOTE #3
5-3	PLATE(4-I27-SLOT33-S)	PL12x229x406			1	A36		19.31	NOTE #3
5-4	PLATE(4-I27-SLOT33-S)	PL12x229x356			1	A36		16.93	NOTE #3
5-5	COVER PLATE(4-R14)	PL6x141x141			2	A36	2.06	4.12	NOTE #3
6	SQUARE TUBE(1-I6)	ST150x150x6	1441	56.73	1	A500 Gr.B		83.87	NOTE #3
7-1	SQUARE TUBE(1-I6)	ST150x150x6	1531	60.28	1	A500 Gr.B		89.11	NOTE #3
7-2	PLATE	PL12x250x250			1	A36		12.98	NOTE #3
7-3	PLATE(4-I27-SLOT33-S)	PL12x229x356			1	A36		16.93	NOTE #3
8	STIFF. PLATE(R=12)	PL10x65x181			1	A36		2.04	NOTE #3
9	H.S.B/N/1TW/1PW	1"-8 UNC-2 3/4"			2	A325	1.54	3.08	NOTE #3

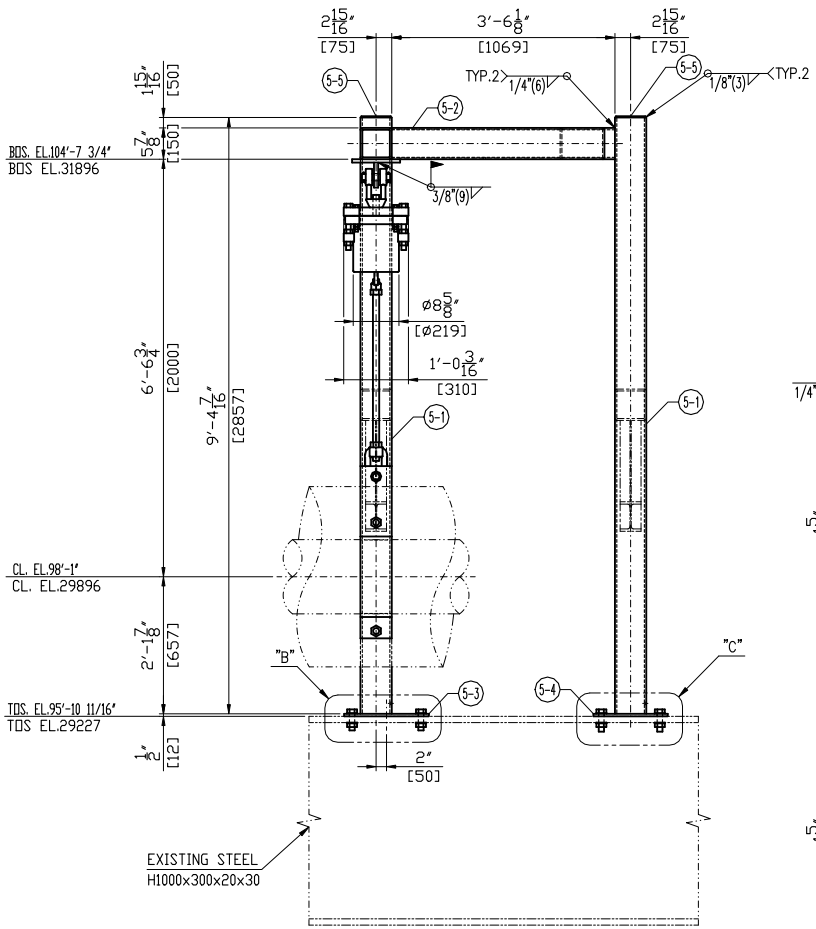

SECTION A-A
LOOKING EAST

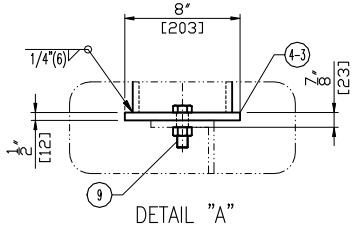

DETAIL "A"

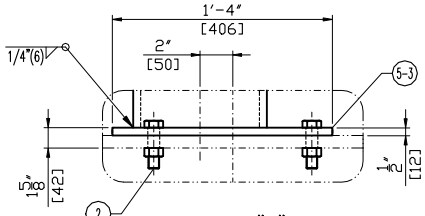

DETAIL "B"

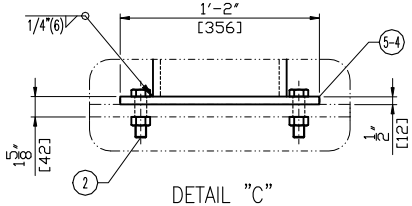

DETAIL "C"

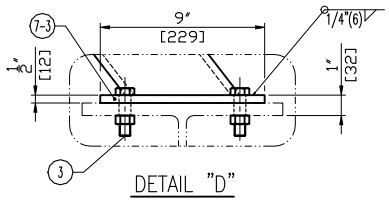

DETAIL "D"

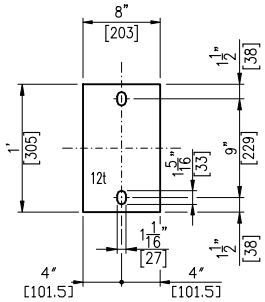

ITEM 4-3

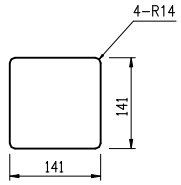

ITEM 4-4 5-5

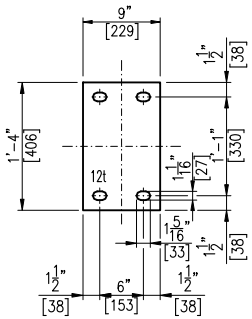

ITEM 5-3

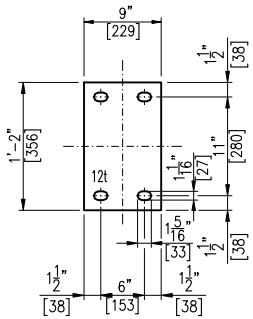

ITEM 5-4 7-3

NLR

Copyright © GE Vernova and/or its affiliates 2026
All rights reserved. The information herein is proprietary information of GE Vernova and/or its affiliates.

GE VERNOVA

Document Type: DETAIL DRAWING		Sheet Size A2
Document Title: PIPE SUPPORT FOR HP STEAM		
Creation Date 2026-01-21	Drawing No. 1635572-1501-PS03	Revision –	Sheet 2 OF 3

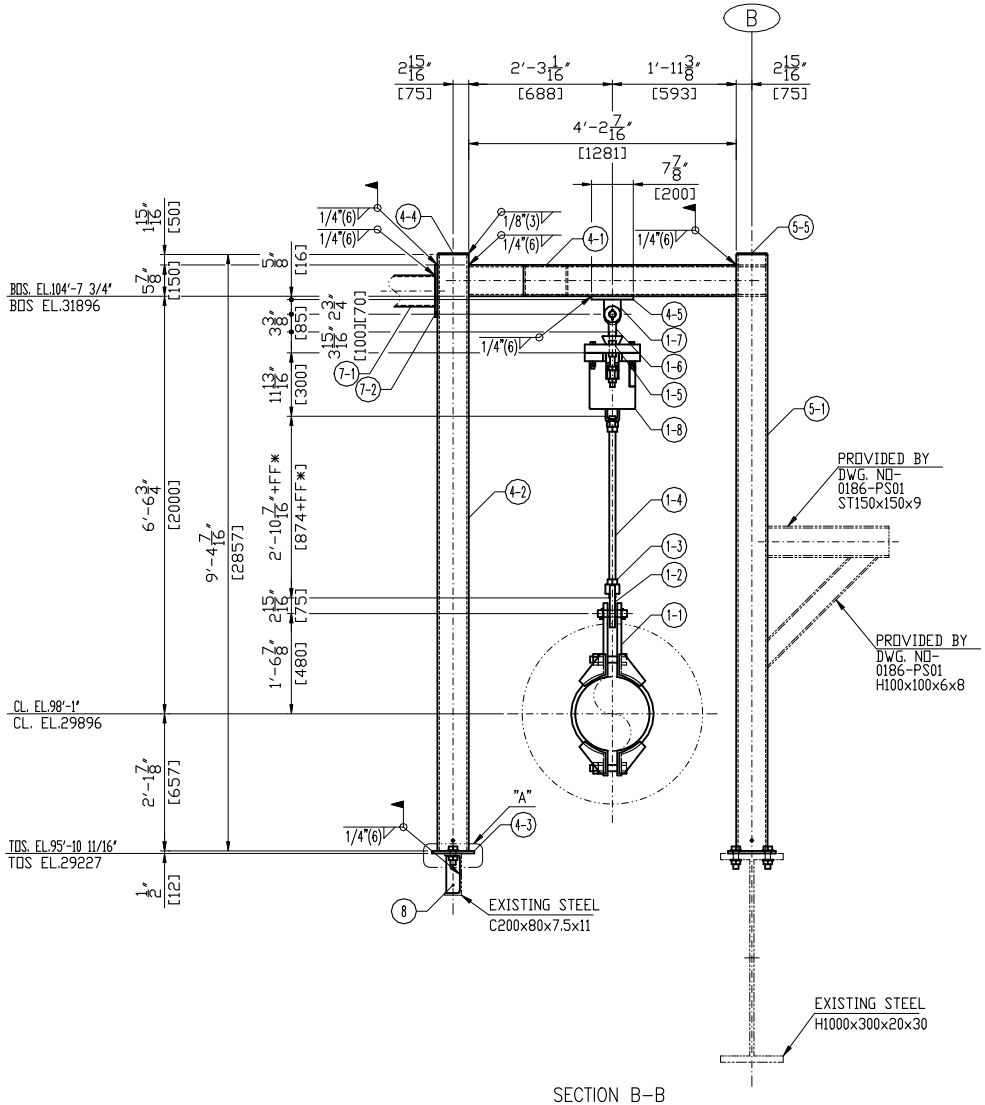

SECTION B–B
LOOKING NORTH

NLR

Copyright© GE Vernova and/or its affiliates 2026
All rights reserved. The information herein is proprietary information of GE Vernova and/or its affiliates.

GE VERNOVA	Document Type: DETAIL DRAWING		Sheet Size A2
	Document Title: PIPE SUPPORT FOR HP STEAM		
Creation Date 2026–01–21	Drawing No. 1635572–1501–PS03	Revision –	Sheet 3 OF 3